Chapter SPS 314

APPENDIX

The material contained in this appendix is for clarification purposes only and is numbered to correspond to the number of the rule as the rule appears in the text of this chapter.

A−314.01 (1) STATUTORY DEFINITIONS OF TERMS USED IN THIS CHAPTER. (a) *Public buildings and places of employment.* Section 101.01 (11), Stats., reads:

(11) "Place of employment" includes every place, whether indoors or out or underground and the premises appurtenant thereto where either temporarily or permanently any industry, trade, or business is carried on, or where any process or operation, directly or indirectly related to any industry, trade, or business, is carried on, and where any person is, directly or indirectly, employed by another for direct or indirect gain or profit, but does not include any place where persons are employed in private domestic service which does not involve the use of mechanical power or in farming. "Farming" includes those activities specified in s. 102.04 (3), and also includes the transportation of farm products, supplies, or equipment directly to the farm by the operator of the farm or employees for use thereon, if such activities are directly or indirectly for the purpose of producing commodities for market, or as an accessory to such production. When used with relation to building codes, "place of employment" does not include any of the following:

(a) An adult family home, as defined in s. 50.01 (1).

(b) Except for the purposes of s. 101.11, a previously constructed building used as a community−based residential facility, as defined in s. 50.01 (1g), which serves 20 or fewer residents who are not related to the operator or administrator.

(c) A home−based business, as defined by the department by rule.

Section 101.01 (12), Stats., reads:

(12) "Public building" means any structure, including exterior parts of such building, such as a porch, exterior platform, or steps providing means of ingress or egress, used in whole or in part as a place of resort, assemblage, lodging, trade, traffic, occupancy, or use by the public or by 3 or more tenants. When used in relation to building codes, "public building" does not include any of the following:

(a) A previously constructed building used as a community−based residential facility as defined in s. 50.01 (1g) which serves 20 or fewer residents who are not related to the operator or administrator.

(b) An adult family home, as defined in s. 50.01 (1).

(c) A home−based business, as defined by the department by rule.

(b) *Exclusions referenced in ss. 101.01 (11) and (12), Stats., and exemptions in s. 101.05, Stats.* Section 102.04 (3), Stats., as referenced in s. 101.01 (11), Stats., reads:

(3) As used in this chapter "farming" means the operation of farm premises owned or rented by the operator. "Farm premises" means areas used for operations herein set forth, but does not include other areas, greenhouses or other similar structures unless used principally for the production of food and farm plants. "Farmer" means any person engaged in farming as defined. Operation of farm premises shall be deemed to be the planting and cultivating of the soil thereof; the raising and harvesting of agricultural, horticultural or arboricultural crops thereon; the raising, breeding, tending, training and management of livestock, bees, poultry, fur−bearing animals, wildlife or aquatic life, or their products, thereon; the processing, drying, packing, packaging, freezing, grading, storing, delivering to storage, to market or to a carrier for transportation to market, distributing directly to consumers or marketing any of the above−named commodities, substantially all of which have been planted or produced thereon; the clearing of such premises and the salvaging of timber and management and use of wood lots thereon, but not including logging, lumbering or wood cutting operations unless conducted as an accessory to other farming operations; the managing, conserving, improving and maintaining of such premises or the tools, equipment and improvements thereon and the exchange of labor, services or the exchange of use of equipment with other farmers in pursuing such activities. The operation for not to exceed 30 days during any calendar year, by any person deriving the person's principal income from farming, of farm machinery in performing farming services for other farmers for a consideration other than exchange of labor shall be deemed farming. Operation of such premises shall be deemed to include also any other activities commonly considered to be farming whether conducted on or off such premises by the farm operator.

Section 50.01 (1), Stats., as referenced in s. 101.01 (12), Stats., reads:

(1) "Adult family home" means one of the following and does not include a place that is specified in sub. (1g) (a) to (d), (f), or (g):

(a) A private residence to which all of the following apply:

1. Care and maintenance above the level of room and board but not including nursing care are provided in the private residence by the care provider whose primary domicile is this residence for 3 or 4 adults, or more adults if all of the adults are siblings, each of whom has a developmental disability, as defined in s. 51.01 (5), or, if the residence is licensed as a foster home, care and maintenance are provided to children, the combined total of adults and children so served being no more than 4, or more adults or children if all of the adults or all of the children are siblings.

2. The private residence was licensed under s. 48.62 as a home for the care of the adults specified in subd. 1. at least 12 months before any of the adults attained 18 years of age.

(b) A place where 3 or 4 adults who are not related to the operator reside and receive care, treatment or services that are above the level of room and board and that may include up to 7 hours per week of nursing care per resident.

Section 50.01 (1g), Stats., as referenced in s. 101.01 (12), Stats., reads:

(1g) "Community−based residential facility" means a place where 5 or more adults who are not related to the operator or administrator and who do not require care above intermediate level nursing care reside and receive care, treatment or services that are above the level of room and board but that include no more than 3 hours of nursing care per week per resident. "Community−based residential facility" does not include any of the following:

(a) A convent or facility owned or operated by members of a religious order exclusively for the reception and care or treatment of members of that order.

(b) A facility or private home that provides care, treatment, and services only for victims of domestic abuse, as defined in s. 49.165 (1) (a), and their children.

(c) A shelter facility as defined under s. 16.308 (1) (d).

(d) A place that provides lodging for individuals and in which all of the following conditions are met:

1. Each lodged individual is able to exit the place under emergency conditions without the assistance of another individual.

2. No lodged individual receives from the owner, manager or operator of the place or the owner's, manager's or operator's agent or employee any of the following:

a. Personal care, supervision or treatment, or management, control or supervision of prescription medications.

b. Care or services other than board, information, referral, advocacy or job guidance; location and coordination of social services by an agency that is not affiliated with the owner, manager or operator, for which arrangements were made for an individual before he or she lodged in the place; or, in the case of an emergency, arrangement for the provision of health care or social services by an agency that is not affiliated with the owner, manager or operator.

(e) An adult family home.

(f) A residential care apartment complex.

(g) A residential facility in the village of Union Grove that was authorized to operate without a license under a final judgment entered by a court before January 1, 1982, and that continues to comply with the judgment notwithstanding the expiration of the judgment.

(h) A private residence that is the home to adults who independently arrange for and receive care, treatment, or services for themselves from a person or agency that has no authority to exercise direction or control over the residence.

Section 101.05, Stats., reads:

101.05 Exempt buildings and projects. (1) No building code adopted by the department under this chapter shall affect buildings located on research or laboratory farms of public universities or other state institutions and used primarily for housing livestock or other agricultural purposes.

(2) A bed and breakfast establishment, as defined under s. 254.61 (1), is not subject to building codes adopted by the department under this subchapter.

(3) No standard, rule, code or regulation of the department under this subchapter applies to construction undertaken by the state for the purpose of renovation of the state capitol building.

(4) No standard, rule, order, code or regulation adopted, promulgated, enforced or administered by the department under this chapter applies to a rural school building if all of the following are satisfied:

(a) The school building consists of one classroom.

(b) The school building is used as a school that is operated by and for members of a bona fide religious denomination in accordance with the teachings and beliefs of the denomination.

(c) The teachings and beliefs of the bona fide religious denomination that operates the school prohibit the use of certain products, devices or designs that are necessary to comply with a standard, rule, order, code or regulation adopted, promulgated, enforced or administered by the department under this chapter.

Section 254.61 (1), Stats., as referenced in s. 101.05, Stats., reads:

254.61 (1) (a) Provides 8 or fewer rooms for rent to no more than a total of 20 tourists or transients.

(b) Provides no meals other than breakfast and provides the breakfast only to renters of the place.

(c) Is the owner's personal residence.

(d) Is occupied by the owner at the time of rental.

(e) Was originally built and occupied as a single−family residence, or, prior to use as a place of lodging,

A–314.01 (1) (g) The following tanks, containers, tank systems and facilities are not regulated by ch. ATCP 93:

(a) Underground storage tanks that have a capacity of less than 60 gallons.

(b) Aboveground storage tanks and intermediate bulk containers that have a capacity of less than 110 gallons.

(c) Tanks storing products regulated under ch. ATCP 33 that are located either at facilities which are also regulated under ch. ATCP 33 or on farm premises.

Note: Chapter ATCP 33 addresses bulk storage of pesticides and fertilizers.

(d) Aboveground storage tanks storing liquids that are used in processes covered in any of the following standards:

1. NFPA 33 Spray Application Using Flammable or Combustible Materials.

2. NFPA 34 Dipping & Coating Processes Using Flammable or Combustible Liquids.

3. NFPA 35 Manufacture of Organic Coatings.

4. NFPA 45 Fire Protection for Laboratories Using Chemicals.

(e) Dedicated breakout tanks that are located at pipeline facilities.

(f) Odorant or other additive injection tanks that are directly connected to a pipeline.

(g) Contractor tanks that are mounted on pickup trucks.

(h) Oil−filled electrical equipment and transformers.

(i) Accumulator tanks.

(j) Process tanks.

(k) Product recovery tanks.

(L) Service tanks.

(m) Marine fueling facilities where fuel is stored and dispensed into the fuel tanks of marine craft of 300 gross tons or more.

(n) Aboveground or underground tank systems that store nonflammable and noncombustible hazardous liquids in concentrations of less than 1 percent by volume.

Note: Material Safety Data Sheets (MSDS) should be consulted for flash point and concentration.

(o) Aboveground tank systems which have a capacity of less than 5,000 gallons and which store nonflammable and noncombustible hazardous liquids in concentrations of 1 percent or more by volume.

Note: Material Safety Data Sheets (MSDS) should be consulted for flash point and concentration.

(p) Tank systems that store a hazardous waste which is listed or identified under subtitle C of the federal Solid Waste Disposal Act, or a mixture of such hazardous waste and other regulated substances that is nonflammable and noncombustible.

(q) Any wastewater treatment tank system that is part of a wastewater treatment facility regulated under section 307 (b) or 402 of the federal Clean Water Act.

(r) Underground storage tank systems that contain radioactive material which is regulated under the federal Atomic Energy Act of 1954.

Note: The Atomic Energy Act of 1954 is contained in 42 USC 2011 et seq.

(s) Underground storage tank systems that are part of an emergency generator system at nuclear power generation facilities regulated by the Nuclear Regulatory Commission under 10 CFR 50 Appendix A.

(t) Asphalt−plant AC tanks which are used as burner or material−supply tanks in the process of making asphalt and which comply with all of the following:

1. Tank configurations are single−wall or double−wall, with or without heating coils.

2. The products stored in the tank are Class II or III liquids ranging from heating oil to used oil, to #4 or #5 heavy oils.

3. The asphalt process equipment and the tank are typically located at an isolated location, such as a quarry, and are generally relocated from year to year or every couple of years.

(u) 1. Facilities located on Indian reservation land that are held either in trust by the United States, or in fee by the tribe or a tribal member.

2. Facilities which are located on off−reservation Indian land that is held in trust by the United States – and which are held either in trust by the United States, or in fee by the tribe or a tribal member.

A−314.01 (8) INTERFERING WITH FIRE FIGHTING, AND FALSE ALARMS. Section 941.12, Stats., reads:

941.12 Interfering with fire fighting. (1) Whoever intentionally interferes with the proper functioning of a fire alarm system or the lawful efforts of fire fighters to extinguish a fire is guilty of a Class I felony.

(2) Whoever interferes with, tampers with or removes, without authorization, any fire extinguisher, fire hose or any other fire fighting equipment, is guilty of a Class A misdemeanor.

(3) Whoever interferes with accessibility to a fire hydrant by piling or dumping material near it without first obtaining permission from the appropriate municipal authority is guilty of a Class C misdemeanor. Every day during which the interference continues constitutes a separate offense.

Section 941.13, Stats., reads:

941.13 False alarms. Whoever intentionally gives a false alarm to any public officer or employee, whether by means of a fire alarm system or otherwise, is guilty of a Class A misdemeanor.

A–314.01 (9) (b) Section 101.02 (7) (c) of the Statutes reads:

(c) Upon receipt of such petition the department shall order a hearing thereon, to consider and determine the issues raised by such appeal, such hearing to be held in the village, city or municipality where the local order appealed from was made. Notice of the time and place of such hearing shall be given to the petitioner and such other persons as the department may find directly interested in such decision, including the clerk of the municipality or town from which such appeal comes. If upon such investigation it shall be found that the local order appealed from is unreasonable and in conflict with the order of the department, the department may modify its order and shall substitute for the local order appealed from such order as shall be reasonable and legal in the premises, and thereafter the said local order shall, in such particulars, be void and of no effect.

Section 101.01 (8) of the statutes defines "local order"and reads:

(8) "Local order" means any ordinance, order, rule or determination of any common council, board of alderpersons, board of trustees or the village board, of any village or city, a regulation or order of the local board of health, as defined in s. 250.01 (3), or an order or direction of any official of a municipality, upon any matter over which the department has jurisdiction.

A−314.01 (13) The pages after the following page contain the forms the Department has developed for use with this chapter, which are primarily intended for use by local fire departments. More−current versions of these forms may be available at the Department's Web site at http://dsps.wi.gov through links to Division of Industry Services forms.

SPS A–314.10 (4) (intro.) The dimensions in the following figure are compiled from NFPA 1 sections 10.16.1, 10.16.2, 10.16.5, 18.2.3.4.1.1 and 31.3.3.3.5. NFPA 1 contains additional requirements for outside storage, such as in chapter 33 for tires, and in section 34.10 for idle pallets.

A−314.10 (4) OUTSIDE STORAGE SCHEMATIC.

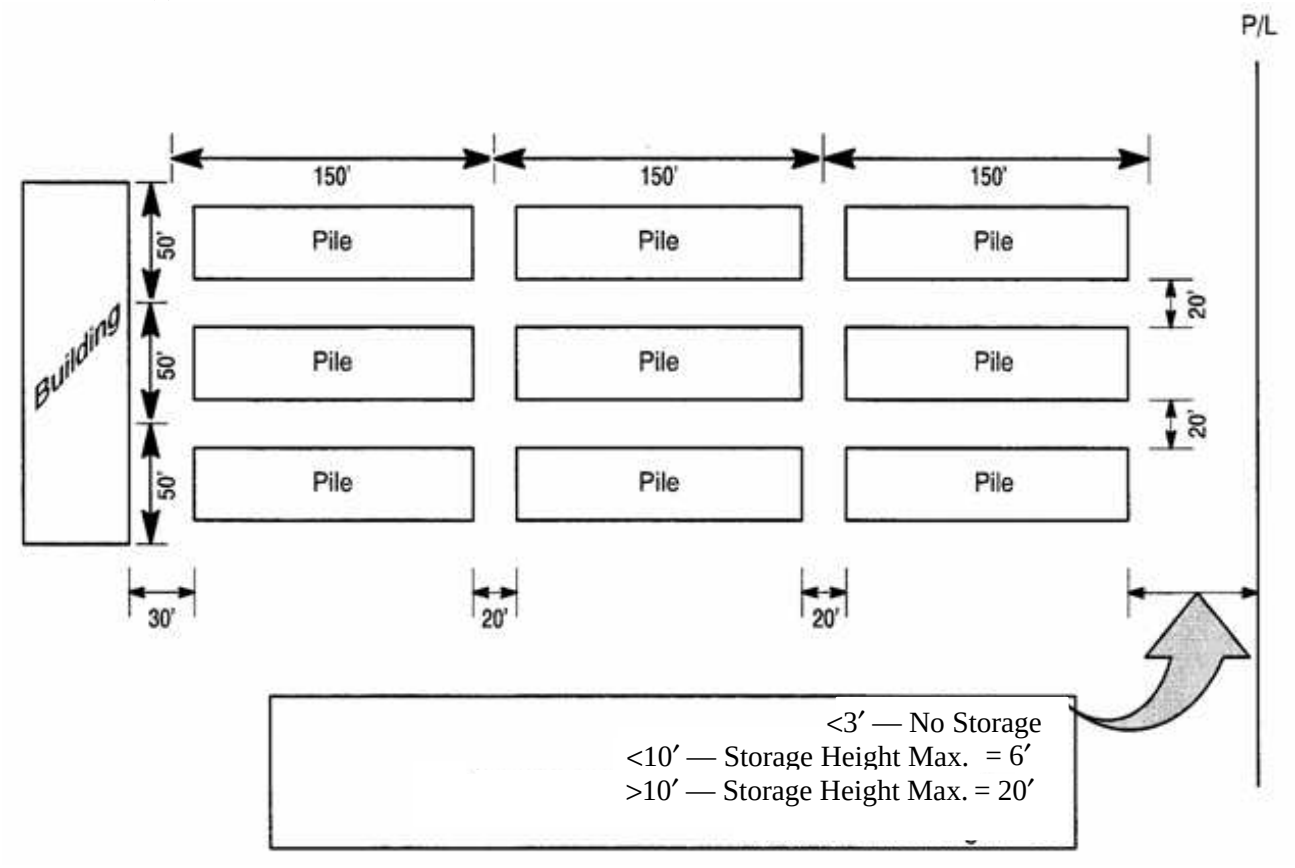

FIRE DEPARTMENT BUILDING RECORD

STREET NAME OR NAME OF OCCUPANCY

NUMBER

STATION:_____ CLASSIFICATION:_____ FIRE LIMITS:_____ CARD NUMBER:_____

OWNER:_____ ADDRESS:_____ TEL:_____

AGENT:_____ ADDRESS:_____ TEL:_____

OCCUPANT:_____ BUSINESS:_____ TEL:_____

CONSTRUCTION-WALLS:_____ ROOF:_____ NO. STORIES:_____

HEATING-TYPE:_____ LOCATION:_____ FIRE ALARM:_____

EXTINGUISHERS: _____

SPRINKLERS: COMPLETE:_____ PARTIAL:_____ WET:_____ DRY:_____ OTHER:_____

STANDPIPES: YES:_____ NO:_____ HOSE CABINETS: YES:_____ NO:_____ HOSE SIZE:_____

GAS SHUT OFF LOCATION:_____ ELEC.SHUT OFF:_____

AIR CONDITIONING SHUT OFF:_____

Personal information you provide may be used for secondary purposes [Privacy Law, s.15.04(1)(m)].

DATE	INSPECTOR	CONDITIONS FOUND	DATE	INSPECTOR	CONDITIONS FOUND

SBD-2113 (R.12/04)

INSURANCE CARRIER: **OWNER** _____

OCCUPANT _____

ADDITIONAL OCCUPANTS: **1.** _____

2. _____

3. _____

SPECIAL HAZARDS: **LIQ. OXY:**_____ **L.P.:**_____ **CHLORINE:**_____ **HYDROGEN:**_____ **OTHER:**_____

LOCATION OF HAZARDS: _____

_____

FLAMMABLES STORED: _____

DATE	INSPECTOR	CONDITIONS FOUND	DATE	INSPECTOR	CONDITIONS FOUND

FIRE DEPARTMENT
FIRE PREVENTION INSPECTION
Correction Order

Section 101.14 of the Wisconsin Statutes designates every fire chief as being a deputy of the Wisconsin Department of Safety and Professional Services and authorizes fire chiefs or their inspectors to conduct inspections for the purpose of ascertaining and causing to be corrected any condition liable to cause fire, or any violation of any law or order relating to the fire hazard or to the prevention of fire.

Occupancy Name _____

Address _____ **City** _____ **Zip** _____

Owner's Name _____

Address _____ **City** _____ **Zip** _____

Item	Code Ref. #	Code Requirement / Correction

Personal information you provide may be used for secondary purposes [Privacy Law, s.15.04(1)(m)].

Date Inspected _____ **Date of Order if Different From Inspection Date** _____

Compliance date (Mo/Day/Yr) _____

Appeal. **An appeal to any of the orders must be submitted in writing within 10 days of the date of the order to:**

_____

Violations Explained to _____

Inspector's Name (Print) _____ **Inspector's Signature** _____

Telephone Number _____

SBD-5295 (R. 07/14)

FIRE PREVENTION PROGRAM SUPPLIES FORM

Mail To:
FIRE PREVENTION PROGRAM
PO BOX 2658
MADISON WI 53701-2658

If you have questions please contact us via FAX (608) 283-7412 or **e-mail at: DSPSSBFireForms@wisconsin.gov**

The following documents are made available to **Fire Departments** as tools to assist in providing fire protection and fire prevention services under ss.101.14, 101.575, Stats. There is **no charge to Fire Departments for REASONABLE quantities** of the supplies listed. We reserve the right to limit quantities.

Many forms and codes can be found on-line at http://dsps.wi.gov/Default.aspx?Page=013fb6c0-c34c-4ab1-9e34-84e995a32d8d

FORM #	TITLE (unit of measure)	QUANTITY
SBD-2113	Inspection Envelopes (each)	_____ea
SBD-5295	Inspection Correction Order Pads (50 forms/ pad)	_____pad
SBD-6396	Fire Inspector ID Card Sheet (6 cards/sheet)	____sheet
SBD-7257	Bolt or Bar Adhesive Signs (25/pkg)	_____pkg
SBD-8221	Fire Door Adhesive Signs (25/pkg)	_____pkg
SBD-9144	Interfering With Fire Fighting And False Alarm Warning Adhesive Signs (25/pkg)	_____pkg
SBD-10615a	Fire Inspection Report (50/pkg)	_____pkg
SBD-10780P	Smoke Detector Brochure (25/pkg)	_____pkg
SBD-10870	Fire Prevention Pocket Guide to Codes	_____ea
SBD-10882	Carbon Monoxide Brochure (25/pkg)	_____pkg

CHAPTER #	CODE NAME	# EACH
SPS 305	Credentials	
SPS 307	Explosive and Fireworks	
SPS 310	Flammable & Combustible Liquids	
SPS 314	Fire Prevention	
SPS 316	Electrical	
SPS 320-325	Uniform Dwelling	
SPS 326	Manufactured Home Communities	
SPS 328	Smoke Detectors	
SPS 330	Fire Department Safety and Health	
SPS 340	Gas Systems	
SPS 345	Mechanical Refrigeration	
SPS 361-366	Wisconsin Commercial Bldg Code	
SPS 375-379	Existing Buildings	

Please complete ALL of the fields below so they are LEGIBLE: This will be the shipping label.

Order Date:

First & Last Name:	Daytime Phone Number: Or **E-mail address**
Fire Department Name:	FAX Number:
Mailing or Shipping Address:	Number of Fire Inspectors:
City & Zip Code: WI	FDID Number:

SBD-8009 (R. 01/13) Personal information you provide may be used for secondary purposes [Privacy Law, s.15.04 (l) (m)].

STATE OF WISCONSIN

Department of Safety and Professional Services

Application for Review, Petition for Variance

-Complete all pages-

Industry Services Division
NOTE: Personal information you provide may be used for secondary purposes [Privacy Law s. 15.04(1) (m), Stats.]

Use this page for fax appointments (fax 877-840-9172)

Indicate date plans will be in Industry Services office _____

1. Facility Information

Facility (Building) Name: _____

Number and Street _____ Zip: _____

SPS Site Number (if known): _____

Legal Description: _____

County of: _____

☐ City ☐ Village ☐ Town of:

Complete for confirmed appointments*:

Transaction ID: _____

Previous Related Trans. ID: _____

Assigned Reviewer: _____

Assigned Office: _____

Review Start Date*: _____

***Submittal must be received in the office of the appointment no later than two working days before the confirmed appointment.**

2. Owner Information	**Customer #**	**3. Designer Information**	**Customer #**
Name		Designer	
Company Name		Design Firm	
Number and Street		Number and Street	
City, State, Zip Code		City, State, Zip Code	
Contact Person		Contact Person	
Telephone Number	Fax Number	Telephone Number	Fax Number

4. Plan Review Status

__ Plan submitted with petition

__ Plan will be submitted after petition determination

__ Requesting revision __ Other: _____

SPS Transaction Number _____

Plan previously review by (please enclose a copy of review letter)

__ State __ Municipality __ Approved __ Held __ Denied

Code Being Petitioned ___ Commercial Building __ HVAC __ Plumbing

__ Private Sewage System __ Swimming Pool __ Electrical __ Flammable Liquids

__ Amusement Rides __ Uniform Dwelling Code __ Boilers __ Elevators

__ Gas Systems__ Refrigeration __ Rental Weatherization __ Other:_____

5. State the code section being petitioned AND the specific condition or issue you are requesting be covered under this petition for variance.

_____

_____

6. Reason why compliance with the code cannot be attained without the variance (Attach additional sheets, if necessary)

_____

_____

7. State your proposed means and rationale of providing equivalent degree of health, safety, or welfare as addressed by the code section petitioned.

_____

_____

8. List attachments to be considered as part of the petitioner's statements (i.e., model code sections, test reports, research articles, expert opinion, previously approved variances, pictures, plans, sketches, etc.).

_____

_____

Verification by Owner - Petition is Valid Only if Notarized with Affixed Seal and Accompanied by Review Fee

Note: Petitioner must be the owner of the building or system or credential applicant for a SPS 305 petition. Tenants, agents, designers, contractors, attorneys, etc., shall not sign petition unless Power of Attorney is submitted with the Petition for Variance Application.

_____, being duly sworn, I state as petitioner that I have read the foregoing petition and I believe it is true and that I have significant ownership rights to the subject building or project.
Petitioner's Name (type or print)

Petitioner's Signature	Subscribed and sworn to before me this date	Notary Public	My commission expires on

Make Checks Payable to: State of WI – DSPS or ☐ Invoice Designer, who will be personally responsible for payment.

Designer: _____
Signature

Total Amount Due
$_____
Attach check here.

Complete other side for variance from SPS 320-325 and SPS 361-366

Owner's Name	Project Location	Plan Number

(R07-14)

Page 2 of _____

Fire Department Position Statement

To be completed for fire or life−safety related variances requested from SPS 361−66, SPS 316, and other fire−related requirements.

I have read the application for variance and recommend: (check appropriate box)

☐ Approval ☐ Conditional Approval ☐ Denial ☐ No Comment

Explanation for recommendation including any conflicts with local rules and regulations and suggested conditions:

_____

_____

_____

_____

Fire Department Name and Address	
Name of Fire Chief or Designee (type or print)	Telephone Number
Signature of Fire Chief or Designee	Date Signed

Municipal Buildings Inspection Recommendation

To be completed for variances requested from SPS 320−323. Also to be used for SPS 316 electrical petitions, if SPS 361− 366 plan review is by municipality or orders are written on the building under construction; optional in other cases.

Please submit a copy of the orders.

I have read the application for variance and recommend: (check appropriate box)

☐ Approval ☐ Conditional Approval ☐ Denial ☐ No Comment

Explanation for recommendation including any conflicts with local rules and regulations and suggested conditions:

_____

_____

_____

_____

Municipality Exercising Jurisdiction	
Name and Address of Municipal Official (type or print)	Telephone Number of Enforcement Official
Signature of Municipal Enforcement Official	Date Signed

Industry Services Division

Petition for Variance
Information and Instructions SPS 303

In instances where exact compliance with a particular code requirement cannot be met or alternative designs are desired, the division has a petition for variance process in which it reviews and considers acceptance of alternatives which are not in strict conformance with the letter of the code, but which meet the intent of the code. **A variance is not a waiver from a code requirement.** The petitioner must **provide an equivalency which meets the intent** of the code section petitioned to obtain a variance. Documentation of the rationale for the equivalency is required. Failure to provide adequate information may delay a decision on the petition. Pictures, sketches, and plans may be submitted to support equivalency. If the proposed equivalency does not adequately safeguard the health, safety, and welfare of building occupants, frequenters, firefighters, etc., the variance request will be denied. NOTE: A SEPARATE PETITION IS REQUIRED FOR EACH BUILDING AND EACH CODE ISSUE PETITIONED (i.e., window issue cannot be processed on the same petition as stair issue). It should be noted that **a petition for variance does not take the place of any required plan review submittal.**

The division is unable to process petitions for variance that are not properly completed. Before submitting the application, the following items should be checked for completeness in order to avoid delays:

- Petitioner's name (typed or printed)
- Petitioner's signature
- The application must be signed by the owner of the building or system unless a Power of Attorney is submitted.
- Notary Public signature with affixed seal
- Analysis to establish equivalency, including any pictures, illustrations or sketches of the existing and proposed conditions to clearly convey your proposal to the reviewer.
- Proper fee
- Any required position statements by fire chief or municipal official

A position statement from the chief of the local fire department is required for fire or life−safety issues. No fire department position statement is required for topics such as plumbing, private onsite sewage systems, or energy conservation. Submit a municipal building inspection department position for SPS 316 electrical petitions, or if SPS 361−366 commercial building plan review is by the municipality or orders are written on the building under construction. (Submit a copy of the orders.) For rules relating to one− and two−family dwellings, only a position statement is required only if the local municipality is the enforcing body. Position statements must be completed and signed by the appropriate fire chief or municipal enforcement official. Signatures or seals on all documents must be originals. Photocopies are not acceptable.

Contact numbers and fees for the division's review of the petition for variance are as follows:

Chapter (circle appropriate category)	Revenue Code	Review Office	Contact Number	Fee	*Revision Fee
SPS 316, Electrical	7631	Waukesha	(262)548-8606	$300	$100
SPS 318, Elevators	8260	Waukesha	(262) 521-5444	$300	$100
SPS 320-325 Uniform Dwelling Code	7655	Madison	(608) 267-5113	$175	$50
SPS 334, Amusement Rides	8266	Madison	(608) 267-4434	$300	$100
SPS 340, Gas Systems	8258	Waukesha	(262) 548-8617	$300	$100
SPS 341 Boilers and Pressure Vessels	8258	Waukesha	(262) 548-8617	$300	$100
SPS 343, Anhydrous Ammonia	8258	Waukesha	(262) 548-8617	$300	$100
SPS 345, Mechanical Refrigeration	8258	Waukesha	(262) 548-8617	$300	$100
SPS 360-366, Commercial Building Code	7648	All Offices	See Numbers Below	$550	$100
(For fire system Petitions for Variance – Contact the Green Bay or Waukesha offices)					
SPS 367, Rental Unit Energy Efficiency Code	7646	Madison	(608) 267-2240	$175	$50
SPS 381-387, General Plumbing	7657	All Offices	See Numbers Below	$300	$75
SPS 390, Swimming Pools	7650	Madison	(608) 267-5265	$300	$75
SPS 383 POWTS	7657	All Offices	See Numbers Below	$300	$75
All Other Chapters				$300	$100

*Revisions are accepted only for one year after action on original petition.

Priority Review: The department will schedule Petitions for Variance at the earliest available date, or the date requested at time of scheduling, whichever is later. Therefore, priority reviews are not generally available. In special circumstances, the section chief of the reviewing office may permit review prior to the scheduled date upon request by the submitter. If earlier review is permitted by the section chief, the petition review fees will be doubled.

Except for special cases, Industry Services will review and make a determination on a petition for variance within 30 business days of the scheduled beginning date, provided all calculations, documents, and fees required for the review have been received.

Appointment and Scheduling Information

It is strongly recommended that an appointment be made in advance by fax. Industry Services has a 24-hour, toll free number dedicated to receiving faxed plan review appointment requests. The dedicated fax number is 877-840-9172. The petition review will be scheduled with the same office where the plan was/will be reviewed. The submitter will receive a letter back with an appointment date, transaction ID number, and the name of the assigned reviewer. The petition and accompanying documents must be received in the office of the appointment no later than two working days before the confirmed appointment. Unscheduled submittals or submittals received without a confirmed appointment date and transaction number may be assigned to offices other than the receiving office depending on reviewer availability. Some petitions may be limited to specific offices depending on the petition issues, see above table for appropriate offices.

Madison – Industry Services	Hayward - Industry Services	La Crosse Area – Industry Services	Green Bay – Industry Services	Waukesha – Industry Services
1400 E Washington Ave Madison, WI 53703 PO Box 7162 Madison WI 53707-7162 608-266-3151 Fax: (for sending questions or additional info to reviewers) 608-267-9566 TTY: Contact Through Relay Email:DspsSbPlanSchedule@wi.gov	10541N Ranch Rd Hayward WI 54843 715-634-4870 Fax: (for sending questions or additional info to reviewers) 715-634-5150 Email: DspsSbPlanSchedule@wi.gov	3824 Creekside La Holmen WI 54636 608-785-9334 Fax: (for sending questions or additional info to reviewers) 608-785-9330 Email: DspsSbPlanSchedule@wi.gov	2331 San Luis Place Green Bay, W I 54304 920-492-5601 Fax: (for sending questions or additional info to reviewers) 920-492-5604 Email: DspsSbPlanSchedule@wi.gov	141 NW Barstow St 4th Floor Waukesha WI 53188-3789 262-548-8600 Fax: (for sending questions or additional info to reviewers) 262-548-8614 Email: DspsSbPlanSchedule@wi.gov

(R07-14)

Code Change Proposal

Department of Safety and Professional Services

Division of Industry Services

Code section number _____

Topic _____

A. Proposed change _____

_____

_____

_____

_____

B. Justification: (**Use reverse side**, or attach a separate page.)

1. Describe the problem this proposed change would address. Include information to substantiate that a problem exists.

2. What is the extent of the problem? How often does it occur and who does it affect?

3. What will happen if this change is not made?

4. What costs, in terms of time and money, are associated with implementing this change?

Name _____

Address _____

Send proposals to Policy Development Bureau PO Box 8366 Madison WI 53708-8366.

Personal information you provide may be used for secondary purposes. Privacy Law, s.15.04 (1) (m).

The Department of Safety and Professional Services does not discriminate on the basis of disability in the provision of services or in employment. If you need this printed material interpreted or in a different form, or if you need assistance in using this service, please contact us. TTTY - use relay..

SBD-10503 (R 07/14) Page 1 of 2

1. Describe the problem this proposed change would address. Include information to substantiate that a problem exists.

2. What is the extent of the problem? How often does it occur? Who does it affect?

3. What will happen if this change is not made?

4. What costs, in terms of time and money, are associated with implementing this change?

SBD-10503 (R 07/14) Page 2 of 2

FIRE INSPECTION REPORT FORM

LOCATION (Legal Address) HEIGHT CONSTRUCTION

NAME OF BUSINESS MAILING CITY ZIP CODE

DATE OF INSPECTION COMPLIANCE DATE

* Violations requiring corrective actions are circled below.

*** §101.14 (2) of the Wisconsin Statutes constitutes every fire chief as being a deputy of the Wisconsin Department of Safety & Professional Services, except in cities of the 1st class, and requires chiefs or their inspectors to periodically inspect every public building and place of employment, for the purpose of determining and causing to be corrected any fire hazard or any violation of any law relating to fire hazards or to the prevention of fires.**

Ch 1 Administration [Also See SPS 314.01]
314.01(5) Temporary Use
1.7.6 Authority – Right of Entry to Inspect
Ch 10 General Fire Safety
10.1 Fundamental Requirements
10.2 Owner/Occupant Responsibilities [Also See SPS 314.01(8)]
10.3 Occupancy
10.4 Maintenance, Inspection, & Testing
10.5 Building Evacuation
10.6 Fire Drills
10.7 Reporting of Fires & Other Emergencies
10.8 Tampering with Fire Safety Equipment10.10 Smoking
10.11 Open Flame, Candles, Open Fires, & Incinerators
10.12 Fire Protection Markings
10.13 Seasonal and Vacant Buildings and Premises
10.14 Combustible Vegetation
10.15 Special Outdoor Events, Carnivals, & Fairs
10.16 Outside Storage [Also See SPS 314.10(4)]
10.19 Storage of Combustible Materials
10.20 Indoor Children's Playground Structures
Ch 11 Building Services
11.1 Electrical Fire Safety
11.2 Heating, Ventilation, & Air-Conditioning
11.3 Elevators, Escalators, & Conveyors
11.5 Heating Appliances [Also See SPS 314.11(2)]
11.6 Rubbish Chutes, Incinerators, & Laundry Chutes
11.7 Stationary Generators and Standby Power Systems
11.8 Smoke Control
11.9 Emergency Command Center
11.11 Medical Gas and Vacuum Systems
11.12 Photovoltaic Systems
Ch 12 Features of Fire Protection
12.1 General
12.2 Construction
12.3 Fire-Resistive Materials & Construction
12.4 Fire Doors & Other Opening Protectives
12.5 Interior Finish
12.6 Contents & Furnishings
12.7 Fire Barriers
12.8 Smoke Partitions
12.9 Smoke Barriers
Ch 13 Fire Protection Systems
13.1 General
13.2 Standpipe Systems
13.3 Automatic Sprinklers [Also See SPS 314.13(1)-(2)]
13.6 Portable Fire Extinguishers
13.7 Detection, Alarm, & Communications Systems [Also See SPS 314.13(5)]
13.8 Other Fire Protection Systems
13.9 Non-Listed Fire Protection or Suppression Devices and Equipment
Ch 14 Means of Egress
14.4 Means of Egress Reliability
14.5 Door Openings
14.12 Illumination of Means of Egress
14.13 Emergency Lighting
14.14 Marking of Means of Egress
Ch 16 Safeguards During Building Construction, Alteration, & Demolition Operations
16.1 General Requirements
16.4 Safeguarding Construction & Alteration Operations [Also See SPS 314.16]
Ch 17 Wildland Urban Interface
Ch 18 Fire Department Access & Water Supply [Also See SPS 314.01(2)(a)3.c.-d.]
18.1 General
18.2 Fire Department Access
Ch 19 Combustible Waste & Refuse
19.1 General
19.2 Combustible Waste & Refuse
Ch 20 Occupancy Fire Safety
Ch Scope: Furnishings; Contents; Decorations; Treated Finishes; Scenery; Foam; Exhibit & Display Materials; Hot Plates; Cooking Operations; Exposition Facilities & Trade Shows; Crowd Managers; Multi-Level Play Structures; High-Rise Buildings; Bulk Storage; Pesticides & Herbicides
[Also See SPS 314.20 Open Flame Devices & Pyrotechnics, All Occupancies]
Ch 21 Airports & Heliports
Ch 22 Automobile Wrecking Yards
Ch 23 Cleanrooms
Ch 24 Drycleaning
Ch 25 Grandstands & Bleachers, Folding & Telescopic Seating, Tents, & Membrane Structures
25.1 General
25.2 Tents
Ch 26 Laboratories Using Chemicals
Ch 27 Manufactured Home & Recreational Vehicle Sites [Not Included - See SPS 314.27 & SPS 326]
Ch 28 Marinas, Boatyards, Marine Terminals, Piers, & Wharves
Ch 29 Parking Garages
29.1 General
Ch 30 Motor Fuel Dispensing Facilities & Repair Garages
30.1 Motor Fuel Dispensing Facilities
30.2 Repair Garages
30.3 Operational Requirements
Ch 31 Forest Products
Ch 32 Motion Picture & Television Production Studio Soundstages & Approved Production Facilities
Ch 33 Outside Storage of Tires
Ch 34 General Storage
34.1 General
34.4 Storage Arrangement
34.5 General Fire Protection
34.6 Building Equipment, Maintenance, & Operations
34.10 Storage of Idle Pallets
Ch 40 Dust Explosion and Fire Prevention
Ch 41 Welding, Cutting, and Other Hot Work
41.1 General
41.2 Responsibility for Hot Work
41.3 Fire Prevention Precautions
Ch 42 Refueling
42.1 General
Ch 43 Spraying, Dipping, & Coating Using Flammable or Combustible Materials [Also See SPS 314.01(1)(f) & ATCP 93]
43.1 Application
43.5 Miscellaneous Spray Operations
Ch 44 Solvent Extraction
Ch 45 Combustible Fibers
45.1 General
45.3 No Smoking
45.6 Baled Storage
45.7 Storage of Hay, Straw, & Other Similar Agricultural Products
Ch-50 Commercial Cooking Equipment
50.1 Application
50.2 General Requirements
50.4 Fire-Extinguishing Equipment
50.5 Procedures for the Use, Inspection, Testing, & Maintenance of Equipment
50.6 Minimum Safety Requirements for Cooking Equipment
Ch 51 Industrial Ovens & Furnaces
Ch 52 Stationary Storage Battery Systems
Ch 53 Mechanical Refrigeration
Ch 60 Hazardous Materials
Ch 61 Aerosol Products
Ch 63 Compressed Gases and Cryogenic Fluids
63.1 General Provisions
63.3 Compressed Gases
Ch 64 Corrosive Solids & Liquids
Ch 65 Explosives, Fireworks, & Model Rocketry [Also See SPS 314.65]
65.1 General
65.2 Display Fireworks
65.3 Pyrotechnics Before a Proximate Audience
65.10 Sale, Handling, & Storage of Consumer Fireworks
Ch 66 Flammable & Combustible Liquids [Also See SPS 314.01(1)(f)]
66.9 Storage of Liquids in Containers –General Requirements
66.19 Specific Operations
Ch 67 Flammable Solids
Ch 68 Highly Toxic and Toxic Solids & Liquids
Ch 69 Liquefied Petroleum Gases & Liquefied Natural Gases
69.1 General Provisions
69.2 LP-Gas Equipment & Appliances
69.3 Installation of LP-Gas Systems
69.5 Storage of Cylinders Awaiting Use, Resale, or Exchange
69.8 Liquefied Natural Gas [LNG] Facilities
Ch 70 Oxidizer Solids & Liquids
Ch 71 Pyrophoric Solids & Liquids
Ch 72 Unstable [Reactive] Solids & Liquids
Ch 73 Water-Reactive Solids & Liquids
*** Other Violations – See Remarks Below**

REMARKS - A COPY OF THIS NOTICE WILL BE ON FILE IN THE OFFICE OF THE FIRE INSPECTOR FOR FURTHER ACTION
Personal information you provide may be used for secondary purposes [Privacy Law, s. 15.04 (1)(m)].

OWNER/AGENT/MANAGER REPRESENTATIVE INSPECTING OFFICER/FIRE DEPARTMENT

SBD-10615a (R. 08/14)

WHITE – Inspector, BLUE – Owner, YELLOW – Fire Department

FIRE DEPARTMENT REGISTRATION FORM

INDUSTRY SERVICES DIVISION
Fire Prevention Program
P. O. Box 2658
Madison, Wisconsin 53701-2658

Please Type or Clearly Print Information
Personal information you provide may be used for secondary purposes [Privacy Law, s. 15.04 (1)(m)].

Date: _____

Name of Fire Department: _____

Street Address of Main Station: _____

Mailing Address: _____

_____, WI _____ County : _____

Name of Designated Fire Chief: _____

Date (Month/Year) Fire Chief Originally Elected or Appointed: _____

Fire Chief Phone: (FD Non-Emergency) : (__ __ __) __ __ __-__ __ __ __ Best Time to Call: _____

Alternate Phone: _____ Fire Chief E-mail: _____

Name of Lead Fire Inspector: _____-

Lead Fire Inspector Phone: _____ Best Time to Call: _____

Lead Fire Inspector E-mail: _____

Name of Public Fire Education Officer: _____

Public Fire Education Officer Phone: (__ __ __) __ __ __-__ __ __ __ Best Time to Call: _____

Public Fire Education Officer E-mail: _____

FAX Number for Fire Department Business: (__ __ __) __ __ __-__ __ __ __

Fire Department Pay Status*:

1 ( ) Career
2 ( ) Combination
3 ( ) Volunteer

*See Definitions on Back of Form

Roster:

Number of Current Members: _____
Number of Firefighters: _____
Number of Fire Inspectors: _____

Municipalities:

List each municipality that is located within the territory served by this fire department. Designate whether Town, Village, or City of: (example; Municipality Town of Adams County: Adams). Place an X behind the type of services provided.

1. Municipality_____ County: _____
   Fire Protection: _____ Fire Prevention: _____ Effective Date for Services Provided: _____
2. Municipality_____ County: _____
   Fire Protection: _____ Fire Prevention: _____ Effective Date for Services Provided: _____

SBD-10638 (R. 7/14) (OVER)

3. Municipality_____ County: _____

Fire Protection: _____ Fire Prevention: _____ Effective Date for Services Provided: _____

4. Municipality_____ County: _____

Fire Protection: _____ Fire Prevention: _____ Effective Date for Services Provided: _____

5. Municipality_____ County: _____

Fire Protection: _____ Fire Prevention: _____ Effective Date for Services Provided: _____

Personal information you provide may be used for secondary purposes (Privacy Law, s. 15.04 (1) (m), Stats.).

FIRE DEPARTMENT PAY STATUS DEFINITIONS:

There are three classifications of fire departments in the United States: Career, Combination, and Volunteer. The terminology is not consistent by definition across the country. For administrative purposes, the Wisconsin Department of Safety and Professional Services uses three classifications of fire departments based upon the pay status of the members. The following definitions are used in Wisconsin:

1 **Career:** Fire departments which have 100% of their members in full or part-time paid positions are classified as Career or Paid Fire Departments. The career fire department does not rely upon paid-on-call or volunteer firefighters to complement staffing (exception being mutual aid assistance). Examples of Career Fire Departments are: Milwaukee, Madison, Green Bay and Eau Claire.

2 **Combination:** Fire departments which have full-time, paid-on-call or volunteer members are classified as Combination or Part-Paid Fire Departments. The combination fire department may have one or more full-time staff, but rely upon paid-on-call or volunteer firefighters to complement the fire department. The full-time staff may be chief officers, fire inspectors, dispatchers or single engine company. Examples of Combination Fire Departments are: Menomonee Falls, Fitchburg, Plover and Rice Lake.

3 **Volunteer:** Fire departments which have predominantly volunteer members are classified as Volunteer Fire Departments. The classification Volunteer Fire Department may be misleading since the classification does not mean that the firefighters may not be compensated. For classification purposes, a volunteer fire department does not have any member of the fire department that is paid for 36 hours or more of work a week. Volunteer fire departments may compensate their members for fire calls, training, clothing allowance or to be on-call. The fire chief or fire inspector may be paid a yearly salary or stipend for their services. Insurance and workman's compensation organizations may have different definitions. Examples of Volunteer Fire Departments are: Washburn, Augusta-Bridge Creek, and New Glarus.

For further pay status definitions, please see our website: http://dsps.wi.gov/Default.aspx?Page=ab3580e3-26da-4e41-8344-866c248dc8e3

FIRE DEPARTMENT REGISTRATION

A fire department that provides fire protection and fire prevention services to a municipality is required to register with the Department. In the fire dues process, fire department means a municipal fire department, public safety department, or public or private organization, such as a fire association, fire district, fire company or fire corporation, organized or created for the purpose of extinguishing fires and preventing fire hazards.

By statute, for the prevention of fire hazards, the chief of the fire department is constituted a Deputy of the Department of Safety and Professional Services. Registration is required to issue the Deputy ID card to the fire chief, and to ensure that the fire department receives their fire dues funding from the municipalities served by the fire department.

Please contact us at DSPSSBFirePrevention@wisconsin.gov if you have any questions about this form.